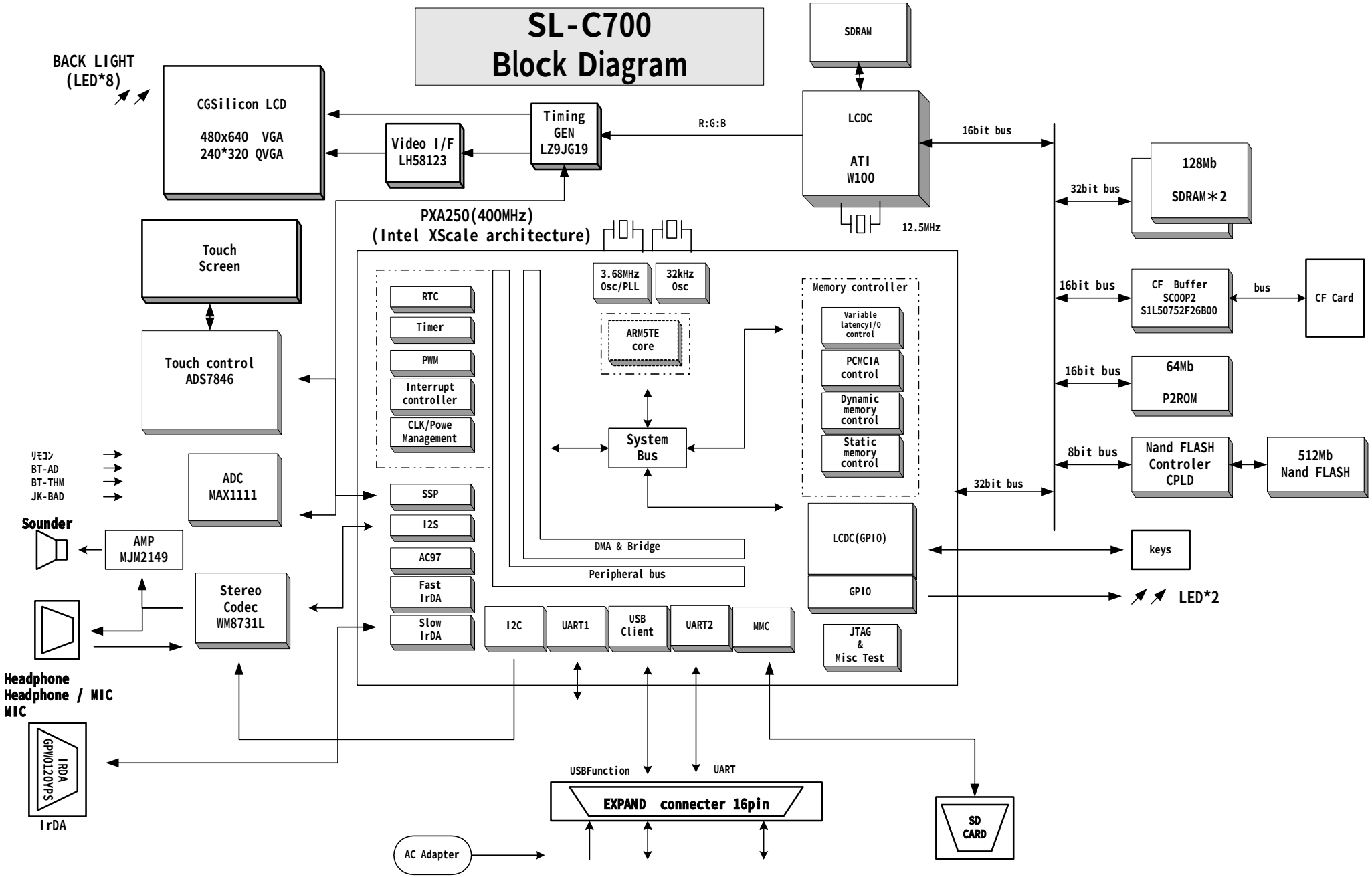SL-C700
Block Diagram